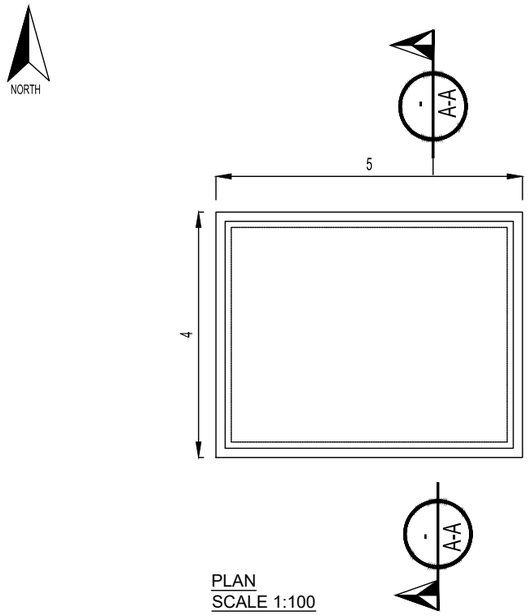

PLAN
SCALE 1:100

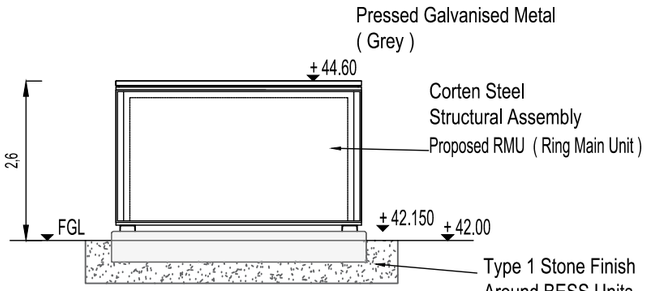

SECTION A-A
SCALE 1:100

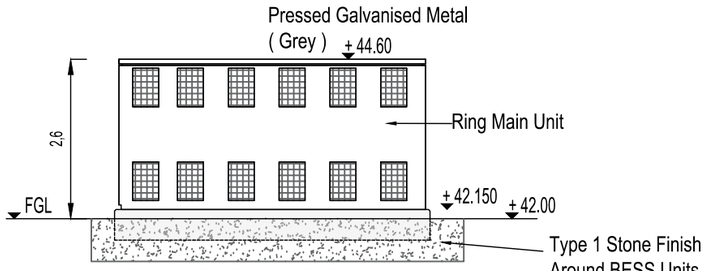

FRONT ELEVATION (SOUTH)
SCALE 1:100

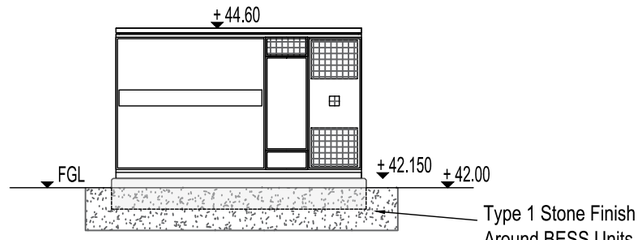

SIDE ELEVATION (EAST)
SCALE 1:100

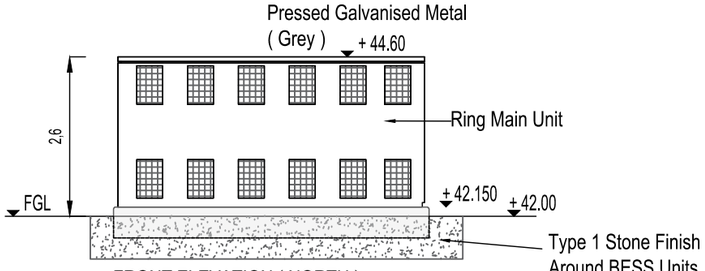

FRONT ELEVATION (NORTH)
SCALE 1:100

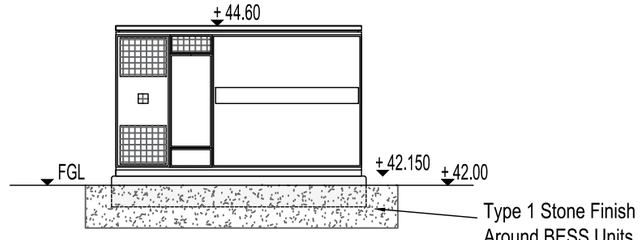

SIDE ELEVATION (WEST)
SCALE 1:100

NOTES:
1 FIGURED DIMENSIONS ONLY TO BE TAKEN FROM THIS DRAWING.
2 ALL DRAWINGS TO BE CHECKED BY THE CONTRACTOR ON SITE.
3 ENGINEER TO BE INFORMED OF ANY DISCREPANCIES BEFORE ANY WORK COMMENCES.
4 THIS DRAWING TO BE READ IN CONJUNCTION WITH ALL OTHER RELEVANT DRAWINGS AND SPECIFICATIONS.

THIS DRAWING IS NOT TO BE USED AS A CONSTRUCTION DRAWING.

rev	date	modifications	D	C	A

Client
CONSTANT ENERGY LTD

Project
TIRAWLEY WIND FARM
CO.MAYO

Stage
PLANNING

Title
BESS -
(RMU) RING MAIN UNIT
EQUIPMENT DETAILS

Scales
1:100 @ A3

Surveyed	Drawn	Checked	Approved	Date
JOD	JB	MG / DT	DK	APRIL 2026

JENNINGS O'DONOVAN
an RSK company

© COPYRIGHT OF
JENNINGS O'DONOVAN AND PARTNERS LIMITED
FINISKLIN
SLIGO
IRELAND
Tel (+353) 719 161 416
Email. info@jodireland.com
www.jodireland.com
@JOD_Sligo
Jennings O'Donovan & Partners
Jennings O'Donovan

Job Ref.	Drawing No.	Revision
6289	PL-2005	0